Calibration of State and Transition Models With FVS

Melinda Moeur[1] and Don Vandendriesche[2]

Abstract—The Interagency Mapping and Assessment Project (IMAP), a partnership between federal and state agencies, is developing mid-scale vegetation data and state and transition models (STM) for comparing the likely outcomes of alternative management policies on forested landscapes across the Pacific Northwest Region. In an STM, acres within a forested ecosystem transition between state classes defined by cover type and seral stage. Transitions resulting from natural and human-induced change can be modeled over long time horizons (centuries). Natural growth and mortality, silvicultural treatments, and stochastic disturbances such as wildfire and insect outbreaks can all be modeled in an STM. In Washington and Oregon, STM models are being used to explore proposed actions that affect wildfire risk, forest health and restoration, habitats for species whose populations are declining, and long-term timber supply. We describe how the Forest Vegetation Simulator (FVS) is being used with regional inventory data to empirically derive STM parameters (residence times in states, pathways between states, and transition probabilities between states), and to link outputs to vegetation states. For example, active fuel treatments in overstocked stands can be simulated to track how management might influence long term probabilities of wildfire risk. A range of outputs from FVS—for example, harvest volumes and carbon balances associated with thinning—can be captured and linked to treatments through the modeling framework. The ability to empirically forecast complex growth and disturbance scenarios using real data makes STM tools more applicable to real-world management questions.

Introduction

The diverse landscapes of the Pacific Northwest are managed by different owners for different objectives. Key considerations facing all forestland planners include managing fuel conditions and wildfire risk, old-growth, wildlife habitat, supply and demand of forest products, biomass supplies and carbon budgets, among others. Ideally, planning efforts on lands with a variety of management objectives would all share a common set of landscape data and modeling methods to help insure consistent answers to common questions. The Interagency Mapping and Assessment Project (IMAP) is responding to this need to foster cooperation on important landscape issues affecting different management entities at different scales. IMAP supports federal and state partners in Washington and Oregon by building integrated datasets, models, and tools for conducting mid-scale assessments (Hemstrom and others 2008).

IMAP uses a state and transition model (STM) approach to project the effects of disturbance and management on the forested landscape. We use the Vegetation Dynamics Development Tool (VDDT) developed by ESSA Technologies Ltd. (2005) as the IMAP STM. An STM treats vegetation as combinations of cover type and structural classes linked by pathways resulting from natural succession, management actions, and disturbances (example, fig. 1). The cover type/structural states (boxes) represent the most important developmental stages. Pathways

In: Jain, Theresa B.; Graham, Russell T.; and Sandquist, Jonathan, tech. eds. 2010. Integrated management of carbon sequestration and biomass utilization opportunities in a changing climate: Proceedings of the 2009 National Silviculture Workshop; 2009 June 15-18; Boise, ID. Proceedings RMRS-P-61. Fort Collins, CO: U.S. Department of Agriculture, Forest Service, Rocky Mountain Research Station. 351 p.

[1] USDA Forest Service, Pacific Northwest Regional Office, Portland, OR.

[2] USDA Forest Service, Forest Management Service Center, Fort Collins, CO.

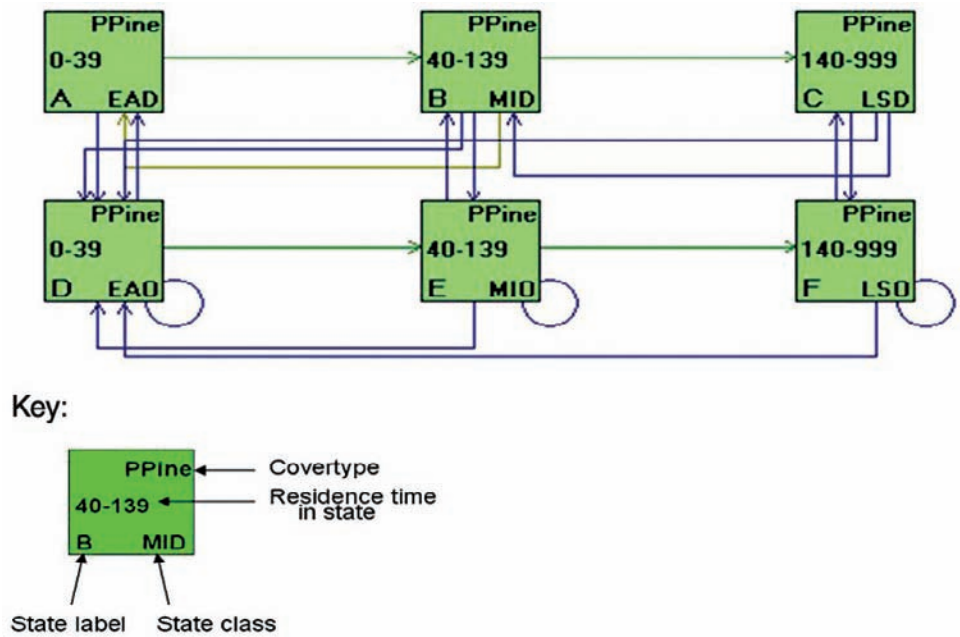

Figure 1—Successional pathways diagram for the Warm Dry Ponderosa Pine VDDT STM, Blue Mountains modeling region. Boxes represent cover type/structural state classes, and arrows represent transitions. Green arrows depict deterministic pathways resulting from natural growth dynamics. Brown or blue arrows depict stochastic pathways following disturbance events such as stand replacing wildfire, non-lethal underburning, or commercial thinning. A key to state box codes follows:

Cover type definitions:
PPine Ponderosa pine cover type

State class definitions:
EAD Early seral, Dense (0-10 inches qmd, > 40% canopy cover)
MID Mid seral, Dense (10-20 inches qmd, > 40% canopy cover)
LSD Late seral, Dense (> 20 inches qmd, > 40% canopy cover)
EAO Early seral, Open (0-10 inches qmd, 10-40% canopy cover)
MIO Mid seral, Open (10-20 inches qmd, 10-40% canopy cover)
LSO Late seral, Open (> 20 inches qmd, 10-40% canopy cover)

(arrows) are the linkages between the states. Residence time is the average length of time that vegetation typically remains in the same class before transitioning to another state through successional dynamics. For disturbance pathways, transition probabilities control the frequency with which movements between states occur.

An STM modeler specifies the model parameters that control states, pathways, and transition probabilities (see sidebar). Of course, model projections will be most realistic when the model parameters are informed by best science and relevant experience. Typically, model users obtain as much information as possible on vegetation dynamics and disturbance ecology from the literature; however, expert opinion is often heavily relied upon to specify model parameters.

Stand projections of inventory data with the Forest Vegetation Simulator (FVS) (Dixon 2003) provide another important source of information for helping make state and transition models behave in a more realistic way. This approach was first

SIDEBAR

Virtually any successional pathway, natural disturbance, or management prescription can be constructed and modeled within VDDT. The examples below are verbal descriptions of important vegetation dynamics within the cool moist mixed conifer model type.

Succession and ingrowth, with and without management

- Ingrowth in medium density stands grow to a closed stand after 20 years of no disturbance.
- Grass/forbs stage can last for as long as 100 years under the harshest conditions. However, under many conditions saplings will establish. These circumstances are represented by an alternate succession pathway with a 0.01 annual probability.
- Common harvesting activities include thinning in mature stands, shelterwood cutting, first entry, second entry, and clearcut with reserves. All have been entered in with a 0.01 annual probability.
- A sapling stand will naturally go to a closed canopy condition unless pre-commercial thinning keeps it in a medium density state.
- Ingrowth within the post-disturbance classes recognizes that snags are falling down and stands are recovering from stand replacing events. A time since disturbance value of 30 years is required before movement out of a post disturbance class.

Fires

- Stand replacing fires (mean fire return interval 300 yrs) transition the area to a grass/forbs post-disturbance state if the stand was in a Medium, Large, Very Large, or Giant size class.
- Mixed severity fires (mean fire return interval 500 yrs) convert 50 percent of the area to grass/forbs post disturbance and the other 50 percent remains in the same class.

Insect & Disease

- Beetle mortality and wind damage is lumped into an insect and disease disturbance with a low probability (0.0001). Only in open stands do these events not decimate the entire stand.

proposed by Stage (1997), as a way of providing "an empirical link between the Columbia River Basin Successional Model (CRBSUM) and the real world." The idea was that current vegetation inventories representing different stages of stand development could be integrated with insect, disease, management activities, and fire effects available in the FVS system to empirically inform parameters and outputs in STMs. In concept, pursuit of such an analysis in Region 6 is particularly appealing because large amounts of plot sample data from regional strategic inventories are available for projection. Thus, it is likely that representative samples exist for most or all modeled states in the STM.

Case Study

In this paper, we describe the process for using FVS in parallel with VDDT to help inform IMAP state and transition models. One objective of this dual modeling system is to test the assumptions made by the STM modeler—in some cases, this process may lead to modification of some STM model parameters. Another objective is to use FVS/empirical data in combination to more fully understand important vegetation pathways that may not have been adequately represented in the original STM—and perhaps, to expand the STM model. Conversely, a development pathway conceived to be important in the original STM may be shown through the FVS process to be not as prevalent as originally thought—perhaps leading to eliminating a particular pathway in a revised STM model. Finally, we know of no better way than an FVS analysis to estimate outputs for the many complex transitions that are likely to be modeled in an STM—FVS, especially when used with the Event Monitor, can be used to develop outputs such as standing and harvest volumes, fuel conditions, and stand structural attributes that can be linked to states and transitions in a VDDT model.

Warm Dry Ponderosa Pine in the Blue Mountains Modeling Region

Within IMAP, the STM work is organized hierarchically around geographic and ecological study regions. In Region 6, the entire project area has been divided into modeling regions scheduled around the Forest Plan Revision cycle (fig. 2). In subsequent examples, we'll refer to the 13.1-million acre Blue Mountains modeling region where the Wallowa Whitman, Umatilla, and Malheur National Forests are revising their forest plans. Within a modeling region, the landscape is divided into ecological strata called potential vegetation types (PVTs). A PVT represents a particular combination of environment, disturbance regimes, and vegetation growth potential. Unique VDDT state and transition models are designed for each PVT (Hemstrom and others 2006). For example, the Blue Mountains project area is stratified into eight PVTs that are depicted by separate models (table 1). Within each model, combinations of cover type and structure—standard classes of tree size, canopy density, and canopy layering (table 2)—define the state boxes.

Each acre in the landscape is initialized to its PVT, cover type, and structural state based on a map of current vegetation (fig. 3). These maps have been created using the gradient nearest neighbor imputation approach (GNN). GNN uses tree-level attributes collected on Current Vegetation Survey (CVS) and Forest Inventory and Analysis (FIA) inventory plots (Max and others 1996; FIA 2006), coupled with satellite imagery and other spatial data such as topography and climatic gradients, to populate 30-meter pixel maps (Ohmann and Gregory 2002). The resulting vegetation maps are used to define the initial conditions that assign acres to state classes according to the definitions in table 2. Other spatial layers are used to stratify the study region by ownership and land allocation.

In IMAP, the primary spatial unit for modeling is the watershed (5th *–order* hydrologic code, units averaging about 100,000 ac), and within the watershed, additional sub-strata are created for owner/land allocation groups defined primarily by distinct management goals. Examples are timber suitable public lands, wilderness areas, species habitat reserves, and private industrial lands managed for intensive wood production. Summarizing the acres and outputs for these sub-strata generates useful information about the spatial distribution of landscape characteristics without implying pixel or stand-level accuracy. Results at the watershed/owner/allocation scale are fine enough for most mid-scale assessments.

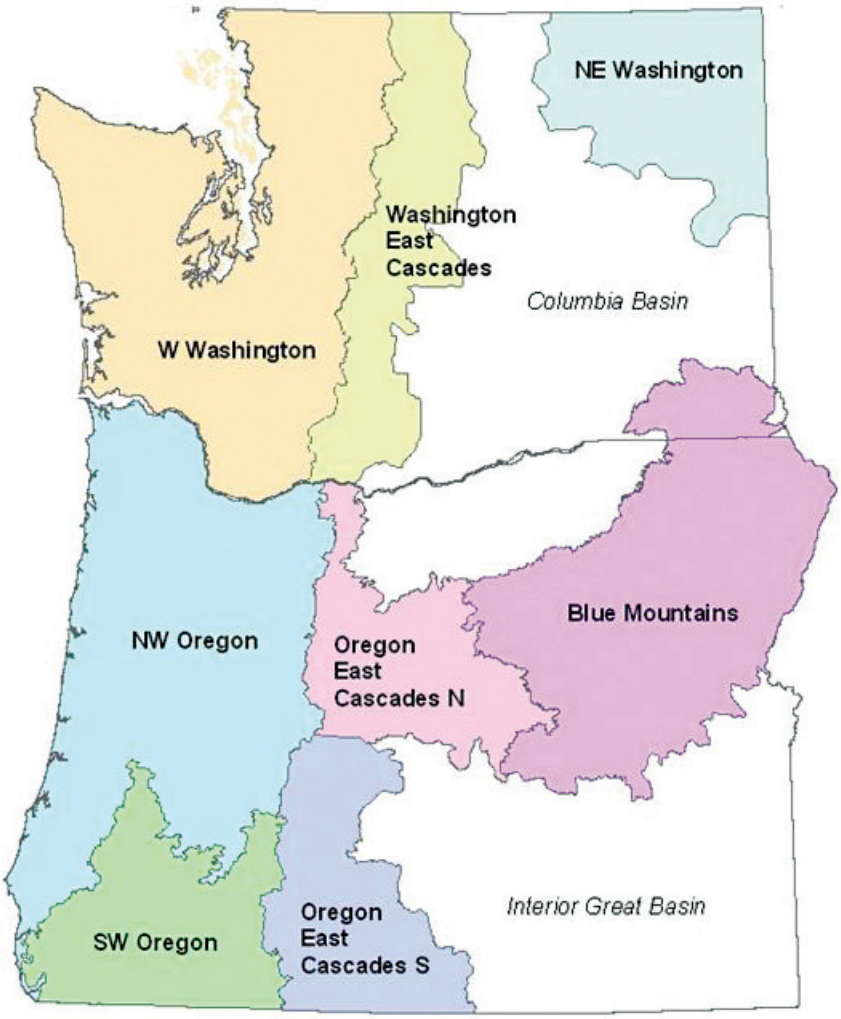

Figure 2—IMAP modeling regions in Washington and Oregon. Modeling regions are scheduled to coincide with National Forest Plan revisions. Because the Columbia Basin and Interior Great Basin have little forested land, they are not currently being modeled.

Table 1—Eight VDDT models are defined by forested potential vegetation type in the Blue Mountains modeling region. Shown are the numbers of inventory plots on National Forests by potential vegetation type. The Blue Mountains variant of FVS was used for modeling all plots.

VDDT potential vegetation type	VDDT code	Cover types[b]	Number of CVS plots by National Forest[a]			
			MAL	UMA	WAW	Total
Subalpine whitebark pine	sw	WB	16	8	46	70
Cold dry mixed conifer	cd	GF; ES/AF; WL/LP	22	126	282	430
Cool moist mixed conifer	cm	DF/GF/ES; WL/LP	206	432	426	1064
Warm dry grand fir	dg	PP; DF/GF	420	122	242	784
Warm dry Douglas-fir	dd	PP; DF	280	302	440	1022
Warm dry ponderosa pine[c]	**dp**	**PP**	**312**	**66**	**86**	**464**
Hot dry ponderosa pine	xp	PP	288	60	100	448
Woodland western juniper	jw	WJ	94	26	8	128
Non-forest	nf	none	120	128	444	692
Total:			1758	1270	2074	5102

[a] National Forest codes: MAL = Malheur; UMA = Umatilla; WAW = Wallowa-Whitman.

[b] Species codes: AF = subalpine fir; DF = Douglas-fir; ES = Engelmann spruce; GF = grand fir; LP = lodgepole pine; PP = ponderosa pine; WB = whitebark pine; WJ = western juniper.

[c] Used as the modeling example in the text.

Table 2—Standard structure classes that along with cover type (see table 1) and disturbance history, define states in the IMAP VDDT models.

Size class (DBH—inches) [a]	Class description
0.0 to 4.99	Seedling-Sapling
5.0 to 9.99	Small tree
10.0 to 14.99	Medium tree
15.0 to 19.99	Large tree
20.0 to 24.99	Very large tree
25.0 and larger	Giant tree
Canopy cover (percent)	**Class description**
0 to 9.9	Non-tree
10 to 39.9	Open
40 to 69.9	Medium
70 to 100	Closed
Canopy layers	**Class description**
1	Single
2 or more	Multiple

[a] Quadratic mean diameter of dominants and codominants.

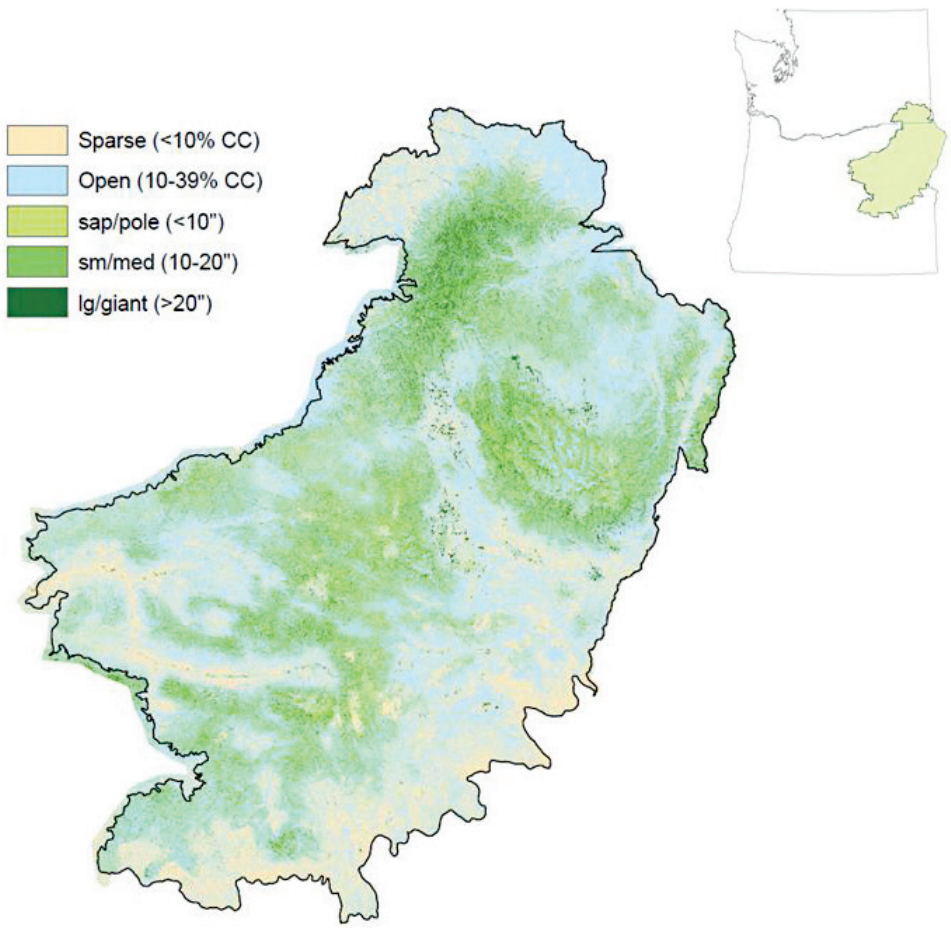

Figure 3—Existing vegetation for the Blue Mountains modeling region from Gradient Nearest Neighbor modeling (Ohmann and Gregory 2002).

FVS Analysis

In order to accomplish the integration of FVS within the STM approach, a computer program was developed to classify inventory data into vegetation classes (i.e. cover type, size class, canopy cover, canopy layers) for initial conditions and for subsequent projection cycles. The Preside program (Vandendriesche 2009a) summarizes various vegetation classes into states and provides average time in a particular state and the probability of movement to associated states. Armed with this tool, the general sequence of steps in an analysis process that integrates FVS projections with state and transition models is this:

1. Prepare the inventory data for projection by FVS.
2. Adjust FVS parameters to the current inventory.
3. Develop natural growth projections to estimate parameters for successional pathways (without disturbance).
4. Process the tree list output through the Preside program and accumulate the results into a matrix from which mean residence times within states and transition probabilities between states can be summarized.
5. Aggregate stand attributes by vegetation states.
6. Repeat steps for projections with management, insect and disease, and fire to estimate parameters for disturbance pathways.
7. Review state and transition empirical parameters in relation to conceptual parameters and adjust the STM where necessary.

Inventory data—Data for an FVS-VDDT analysis can be obtained from regional strategic inventories such as CVS and FIA. On U.S. Forest Service non-wilderness lands (as well as on BLM lands in western Oregon), one CVS plot is installed every 1.7 miles (1 plot per about 7,200 ac). On U.S. Forest Service wilderness lands, plots are installed at one-fourth the intensity of non-wilderness (one plot every 3.4 miles). On non-U.S. Forest Service or non-BLM lands, we are using FIA data from the periodic inventories collected between 1988 and 1999 in Oregon and Washington, and also from FIA's National Annual Inventory beginning in 2000 in Oregon and 2002 in Washington. FIA plots are installed at a sampling intensity of one plot every 6,000 acres. For the example analysis, we used data only from the Region 6 CVS inventory on the Wallowa Whitman, Umatilla, and Malheur National Forests. There were 5,102 samples (2,551 plots, each measured at two sampling occasions) available for the Blue Mountains modeling region, of which 464 samples fall in the warm dry ponderosa pine (*Pinus ponderosa* C. Lawson) PVT (table 1).

CVS data are prepared for projection using a translator program developed at Region 6 (Gregg and other 2004). Before further processing, each plot must be assigned to the appropriate VDDT model. The ecoclass code (Hall 1998) recorded for the plot is used to assign the potential vegetation type. A GIS intersection of the plot location with ownership and land allocation coverages are used to assign the administrative classification.

FVS calibration—Before projecting the large set of inventory plots for a project area, it is important to adjust FVS default parameters for growth, mortality, and regeneration for each combination of PVT model type and owner/allocation stratum. Table 1 shows the number of inventory samples used for calibration and modeling for each PVT in the Blue Mountains study area. The purpose of performing these calibration steps is so that the projections more closely mimic the empirical conditions determined from the actual field measurements. One example of a situation where calibration is essential is for projecting old-growth stands. The sample base upon which the empirical growth and mortality equations

in FVS are built is not well suited to modeling old-growth forests over long time horizons, and yet typically VDDT simulations are performed for 200- to 300-year intervals. Thus, thoughtful calibration can greatly improve the realism of simulations when projecting stands over long time periods by attenuating height and diameter growth and mortality during stand senescence.

Calibration procedures include using the FVS self-calibrating feature (for example, altering the baseline estimate of the large-tree diameter growth models), estimating and inputting natural regeneration response (querying existing stands to tabulate their seedling component), accounting for tree defect for volume estimates (adjusting net merchantable volume from gross tree dimensions), and determining tree species size attainment and limiting stand maximum density. Another paper in this volume (Vandendriesche 2009b) deals with this topic in more detail, and so we will not elaborate further in this paper.

Natural growth projections—In VDDT, the successional classes, pathways, and transition probabilities are defined for each potential vegetation type. A single PVT may have more than one set of probabilities defined to represent different management regimes or ecological conditions. In general, two types of transitions can occur (fig. 1). One type is movement between states due to natural succession. This process integrates background disturbances that affect regeneration, growth, and self-thinning, but not extrinsic disturbances such as insect or disease outbreaks, wildfire, or silvicultural treatment. Transitions representing natural successional dynamics (or 'natural growth') are modeled deterministically in VDDT. What this means is that transitions from one class to the next class occur when the residence time (a surrogate for successional 'age') has exceeded the value set for the state. For transitions in VDDT related to disturbances, movement between states is determined stochastically according to probabilities set by the user.

Once the FVS calibration procedure has been completed, we use FVS commands (keywords) to adjust growth, mortality, and regeneration responses as outlined in the above section. To model natural succession in FVS, we track residence time in a state—the average length of time that vegetation typically remains in that state before transitioning to the next state along the successional pathway. We do this by projecting all the plots in the study region without invoking any extrinsic disturbance or pest effects in FVS. Then 300-yr projections are performed for every plot, outputting tree lists and stand summaries each cycle for completing the next two steps.

Classify the tree lists, calculate residence times—Preside classifies the current tree list for each plot at each cycle boundary into the cover type, size class, canopy closure, and canopy layer that define the possible states (tables 1 and 2). Following Stage's approach (1997), estimates of the residence times and pathways are summarized by use of an array of all possible transitions from one state to another, and indexed by PVT, owner, and allocation groups to which a plot belongs. For each plot at each cycle, its source (that is what state it began the cycle in) and destination (that is what state it ended the cycle in) are recorded. The length of time each plot remains within a state class between cycles is accumulated and the mean and variance of residence times is summarized over all the cycles and transitions in the projection (fig. 4). The pathways (direction of movement between source and destination) between states are also summarized using the array.

Accumulate and summarize outputs—At the end of an FVS projection, a set of FVS post-processing steps have been bundled together that produce aggregate summaries for each of the state classes, using the sample of plots populating each

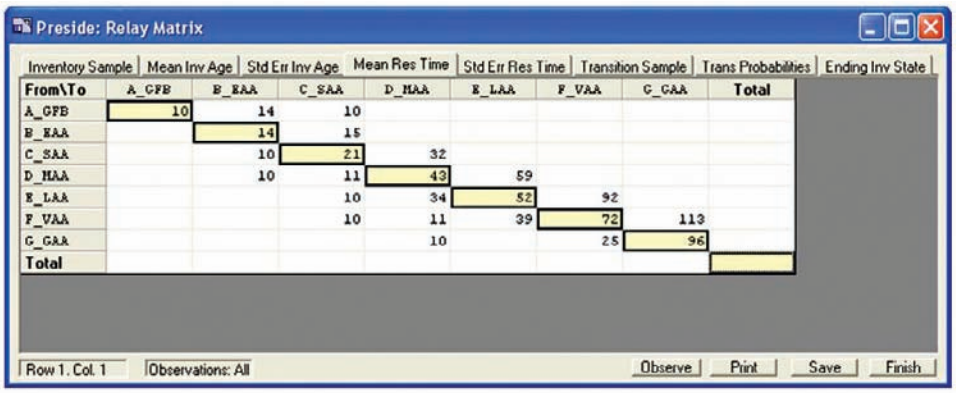

From\To	A_GFB	B_EAA	C_SAA	D_MAA	E_LAA	F_VAA	G_GAA	Total
A_GFB	10	14	10					
B_EAA		14	15					
C_SAA		10	21	32				
D_MAA		10	11	43	59			
E_LAA			10	34	52	92		
F_VAA			10	11	39	72	113	
G_GAA				10		25	96	
Total								

Figure 4—Preside program relay matrix. Preside calculates mean residence times and transition probabilities for the sample of plots in a PVT projection.

State class definitions:

A_GFB VDDT-State A: Grass/Forbs/Brush
B_EAA VDDT-State B: Seed/Sap size class (0-5 inches qmd)
C_SAA VDDT-State C: Small Tree size class (5-10 inches qmd)
D_MAA VDDT-State D: Medium Tree size class (10-15 inches qmd)
E_LAA VDDT-State E: Large Tree size class (15-20 inches qmd)
F_VAA VDDT-State F: Very Large Tree size class (20-25 inches qmd)
G_GAA VDDT-State G: Giant Tree size class (25+ inches qmd)

state class during the projection. It is then easy to display graphics for communicating the STM results. For example, images from the Stand Visualization System (SVS) can be displayed for each vegetation state that is an aggregate of the plots in that state (fig. 5). The post-processing programs also index the aggregate state classes to summary values derived from the tree lists, attributes from standard FVS output reports, and variables computed from the Event Monitor. This feature is useful for tracking important values such as stand volume and biomass across states (example, fig. 6). Other attributes tracked by this process are shown for the warm dry ponderosa pine (example, table 3).

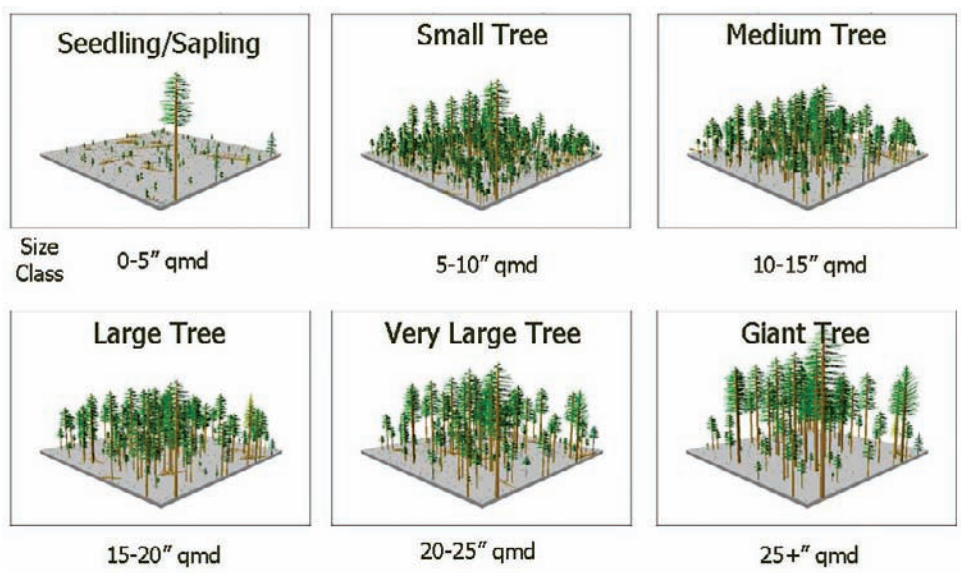

Figure 5—Stand Visualization System images of the dry ponderosa pine model arrayed by size class.

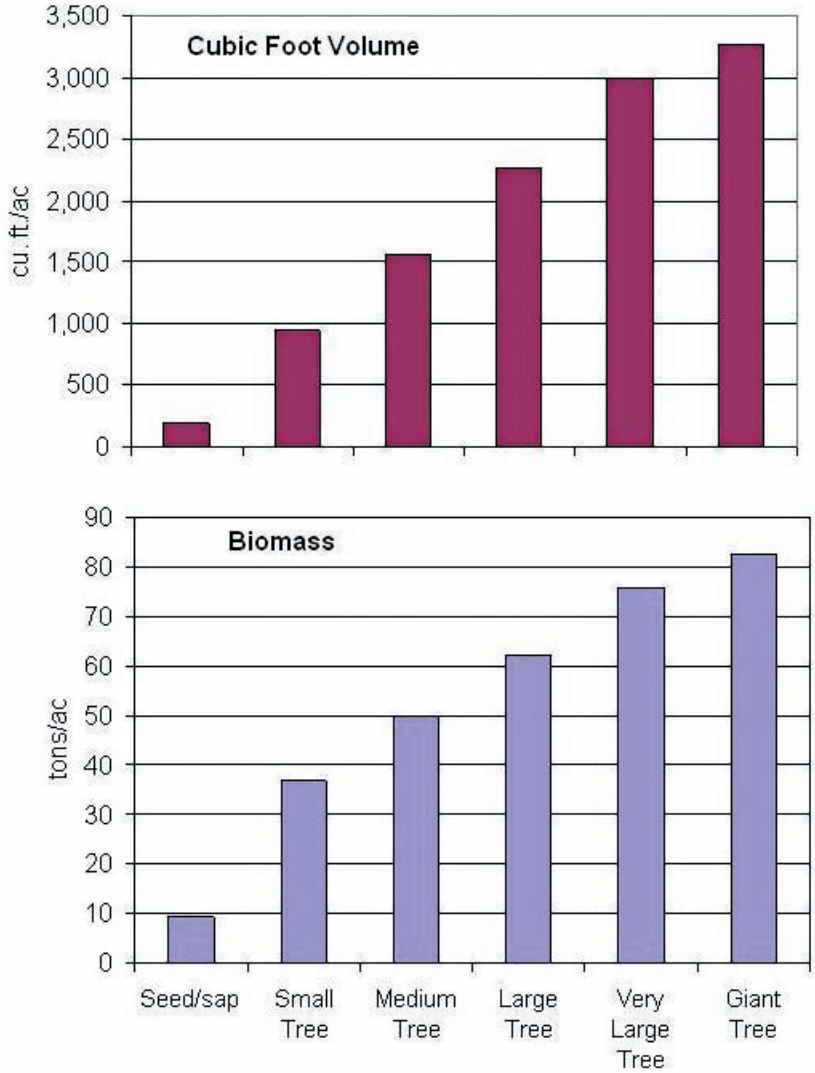

Figure 6—Summary attributes of aggregate state classes for the warm dry ponderosa pine model tracked by the FVS-VDDT post-processing programs.

Feedback loop between FVS and VDDT model—The mean residence times and transition probabilities that are computed by the Preside program can be used to substantiate assumptions built into the VDDT model by the user. In the warm dry ponderosa pine example, we compared the residence times computed from the 464 sample plots projected through the FVS system with VDDT parameter values obtained from the literature and from expert opinion (table 4). Recognizing five size classes spanning a 200-year time horizon for dry ponderosa pine sites in the Interior West, note the disparity of residence times by source method within the developmental stages. The most simplistic view renders an even splicing of the time distribution as cited by the literature review. A group of experts recognized an emphasis on enhanced early growth with a slow down occurring in later size classes. The FVS modeled runs conform to empirical knowledge gained from inventory data and indicate that the STM residence times should be further adjusted, especially shortening the time-in-state for the smallest size classes and lengthening it for the largest state classes.

Table 3—Aggregate values by VDDT vegetation state derived from FVS computed variables for the warm dry ponderosa pine model, by size class.

	Seed/sap (0 - 5")	Small tree (5-10")	Medium tree (10-15")	Large tree (15-20")	Very large tree (20-25")	Giant tree (25"+)
Vegetation Structure Variables:						
Dominance Type	PIPO	PIPO	PIPO	PIPO	PIPO	PIPO
Size Class	1	2	3	4	5	6
Canopy Class	1	2	2	2	2	2
Canopy Layers	1	1	1	2	2	2
Stand Age – Dominant Story	15	46	93	140	199	241
Total Plot Sample Count	23	558	3,406	4,242	2,561	394
Stand-Stock Variables:						
Basal Area/Acre, trees >= 1.0" diameter	19	91	112	122	131	130
QMD – Top 20 % trees, diameter	4.0	8.6	13.1	17.5	22.3	25.7
Percent Canopy Cover	24	53	51	46	43	40
Live – Cubic Feet/Acre	198	943	1563	2272	2997	3268
Live – Board Feet/Acre	1,139	5,043	7,868	11,661	16,136	18,534
Wildlife Habitat Variables:						
Standing Snags/Acre						
Small = 5-10" diameter	4.8	28.9	35.1	18.3	6.6	1.9
Large = 10"+ diameter	2.6	6.8	17.9	21.2	18.4	14.0
Extra-large = 18"+ diameter	0.6	2.0	3.2	5.0	8.0	9.7
Snag Recruitment/Acre						
Small = 5-10" diameter	2.2	43.1	30.5	12.4	3.8	1.2
Large = 10"+ diameter	1.0	4.9	11.3	10.8	7.4	4.3
Extra-large = 18"+ diameter	0.2	0.9	1.2	2.1	2.9	2.7
Wildfire Risk Variables:						
Crown Bulk Density	0.05	0.10	0.07	0.06	0.05	0.05
Fire Hazard Rating	3	4	4	3	3	2
Biomass-Carbon Variables:						
Tree Biomass – Dry weight live & dead/boles & crown	9	37	50	62	76	83
Stand Carbon – Total carbon above & below ground	10	31	49	61	73	80

Table 4—Mean residence time by size class for Dry Ponderosa Pine type.

	Seed/sap 0-5"	Small 5-10"	Medium 10-15"	Large 15-20"	Very large 20"+
Literature Review [a]	40	40	40	40	40
Expert Opinion [b]	35	35	45	45	45
Empirical Basis (FVS) [c]	14	21	43	52	72

[a] The Nature Conservancy, under contract with the U.S. Forest Service Southwestern Regional Office, for the Southwest Forest Assessment Project, values for Ponderosa Pine/Bunchgrass PVT.

[b] U.S. Forest Service Pacific Northwest Regional Office and Fremont-Winema National Forests, Southwest Oregon, collaborative forest plan working group, values for Dry Ponderosa Pine PVT.

[c] Interagency Mapping and Assessment Project, U.S. Forest Service Pacific Northwest Regional Office, Blue Mountain Modeling Region, from the Forest Vegetation Simulator, values for Warm Dry Ponderosa Pine PVT.

For testing pathways, a simple test is to verify the correspondence between the FVS projection and the STM projection at 'equilibrium' over a long projection period for the natural growth scenario. To record the successional growth pattern, the inventory plots are forecasted for 200-300 years through FVS under endemic stand development (without disturbance). Ending vegetation states for the inventory plots as reported by Preside are compared with the equilibrium conditions projected by the STM. If the VDDT model is configured appropriately, it should predict reasonably well the ending inventory conditions projected by FVS. Appropriate adjustments can then be made.

Discussion

Note that both FVS and VDDT models predict state transitions (a change from one vegetation state to another). Transitions in VDDT can only occur along natural growth and disturbance pathways specified by the modeler. But transitions in FVS result from the detailed regeneration, growth, and mortality of individual trees, condensed to VDDT vegetation classes. As a result, FVS typically models transitional pathways not explicitly represented in the corresponding VDDT model. For example, if size class (calculated as the qmd of the dominant overstory) decreases between cycles in FVS as a result of the mortality of just a few large trees in the tree list, the resulting transition may indicate "retrogression" from a larger state class to a smaller state class. Unlike FVS, VDDT won't model retrogressions unless such pathways are explicitly specified by the user. For example, ESSA Technologies Ltd (Beukema & Robinson 2009) investigated a dry mixed conifer PVT from central Washington with a VDDT model having 32 transitions in total covering about 40 classes. For the same PVT, the FVS analysis using about 500 plot samples resulted in 174 transitions only of which 15 pathways were explicitly specified in the associated VDDT model. The remaining transitions were retrogressions, or 'jumps' between non-adjacent state classes.

FVS and STM can be viewed as models with similar objectives, but at different ends of the spectrum in terms of resolution. Both are designed to project vegetation changes due to successional dynamics, and changes driven by disturbances. An STM like VDDT represents vegetation change as movement between classes along pre-determined pathways. An individual tree model like FVS represents vegetation change along a continuum as the sum of regeneration, accretion, and mortality of individual trees. The objective of our paper has been to demonstrate how these models can be used in conjunction to provide an informed decision process. Building linkages between a strong empirical base represented by inventory data and FVS, and an STM calibrated largely by expert opinion, will lead to an improved modeling system.

FVS's expanded resolution accounts for complex changes in the stand development due to regeneration and mortality and the changing impacts of having multi-species stands. However, the challenge of building a comprehensive VDDT model is to represent the important successional, disturbance, and management dynamics in sufficient detail, but not too much detail. If the ultimate goal of landscape planning is to understand the underlying processes, coupling FVS with VDDT will aid the endeavor.

In building STMs, we recognize the importance of striking a balance between FVS projection results, expert judgment (i.e., the collective experience of silviculturists, ecologists, and others about how forest vegetation is likely to develop and respond to management and disturbance), and additional scientific knowledge (i.e., vegetation responses drawn from the literature). The VDDT modeler should review all three types of information and add best professional judgment in selecting the final transition times.

More information about the data, models, and tools mentioned in this paper can be obtained on-line. FVS can be obtained from the FVS website (http://www.fs.fed.us/fmsc/fvs/index.shtml) and Preside, and associated post-processors can be obtained by contacting the authors. A comprehensive user guide that documents the primary computer processing steps is also available (Moeur & Vandendriesche 2009). The Vegetation Dynamics Development Tool can be acquired from ESSA Technologies Ltd. (http://www.essa.com/tools/VDDT/index.html). IMAP data and more information about the IMAP program can be found at http://www.reo.gov/ecoshare/mapping/index-issues.asp.

Acknowledgments

The authors wish to thank Miles Hemstrom with the Pacific Northwest Research Station and James Merzenich with the Pacific Northwest Regional Office for their contributions to modeling analysis and this paper.

References

Beukema, Sarah; Robinson, Don. ESSA Technologies Ltd. 2009. FVS-VDDT-IMAP Progress Report. May 31, 2009. Joint Venture Agreement PNW 08-JV-11261976-362.

Dixon, Gary E. comp. 2003. Essential FVS: A User's Guide to the Forest Vegetation Simulator. Internal Rep. Fort Collins, CO: U. S. Department of Agriculture, Forest Service, Forest Management Service Center. 193p.

ESSA Technologies Ltd. 2005. Vegetation Dynamics Development Tool user guide, Version 5.1. Prepared by ESSA Technologies Ltd., Vancouver, B.C., Canada. 188 pp.

Forest Inventory and Analysis Program. 2006. Field instructions for the annual inventory of Washington, Oregon, and California, 2006. Portland, OR: U.S. Department of Agriculture, Forest Service, Pacific Northwest Research Station. 188 p + app.

Gregg, Tom; Moeur, Melinda; Apple, Carol. 2004. User guide to VIMTrans software for translating Current Vegetation Survey data to Forest Vegetation Simulator format. Portland, OR: U.S. Department of Agriculture, Forest Service, Pacific Northwest Region. Interoffice publication.

Hall, Frederick C. 1998. Pacific Northwest ecoclass codes for seral and potential natural communities. Gen. Tech. Rep. PNW-GTR-418. Portland, OR: U.S. Department of Agriculture, Forest Service, Pacific Northwest Research Station. 290 p.

Hemstrom, M.; Barbour, J; Lettman, G; DeMeo, T; Evers, L. 2008. Interagency Mapping and Assessment Project (IMAP). Interoffice publication. Portland, OR: U.S. Department of Agriculture, Forest Service, Pacific Northwest Research Station. 1 p.

Hemstrom, M.A., Merzenich, J., Reger, A., Wales, B.C., 2006. Integrated analysis of landscape management scenarios using state and transition models in the upper Grande Ronde River Subbasin, Oregon, USA. Landscape and Urban Planning. 80:198–211.

Max, T.A.; Schreuder, H.T.; Hazard, J.W.; Oswald, D.D; Teply, J.; Alegria, J. 1996. The Pacific Northwest Region vegetation and inventory monitoring system. Res. Pap. PNW-RP-493. Portland, OR: U.S. Department of Agriculture, Forest Service, Pacific Northwest Research Station. 22 p.

Moeur, Melinda; Vandendriesche, Don. 2009. FVS Processing Procedures for Landscape Assessments. Interoffice publication. U.S. Department of Agriculture, Forest Service, Forest Management Service Center. Fort Collins, CO. 50 p.

Ohmann, J.L.; Gregory, M.J. 2002. Predictive mapping of forest composition and structure with direct gradient analysis and nearest-neighbor imputation in coastal Oregon, USA. Canadian Journal of Forest Research. 32: 725-741.

Stage, Albert R. 1997. Using FVS to provide structural class attributes to a forest succession model (CRBSUM). In: Teck, Richard, Melinda Moeur, and Judy Adams (compilers). 1997. Proceedings: Forest Vegetation Simulator conference. 1997 February 3-7, Fort Collins, CO. Gen. Tech. Rep. INT-GTR-373. Ogden, UT: U.S. Department of Agriculture, Forest Service, Intermountain Research Station. 222 p.

Vandendriesche, Donald A. 2009a. Advanced FVS Topics for Forest Planning. Preside: Process Residence Times. Interoffice publication. U.S. Department of Agriculture, Forest Service, Forest Management Service Center, Fort Collins, CO. 129 p.

Vandendriesche, Donald A. 2009b. FVS Out of the Box – Assembly Required. U.S. Department of Agriculture, Forest Service, Rocky Mountain Research Station. Ogden, UT. Proceedings: National Silviculture Workshop; June 15-19, 2009. Boise, ID.

The content of this paper reflects the views of the authors, who are responsible for the facts and accuracy of the information presented herein.